Banner

RUNNING BULL

UNLIMITED POWER

Banner Batterien

THE POWER COMPANY

www.bannerbatteries.com

Banner

THE BATTERY OF THE FUTURE. THE RUNNING BULL FROM Banner.

The Running Bull uses the latest AGM technology to provide peak performance. With the AGM battery, Banner has taken another step towards the battery technology of the future. This battery contains no free, liquid electrolyte, which means that Banner has set new standards with regard to performance, safety and freedom from maintenance.

The Running Bull is the first choice whenever vehicles with special, additional electrical consumers, require large amounts of power over prolonged periods.

Banner Batterien
THE POWER COMPANY

Banner

100 % RELIABLE
SOUND SYSTEM
LEAK-PROOF WHEN UPSIDE DOWN AND WITH DAMAGED CASING
AIR-CONDITIONING SYSTEM
STATIONARY HEATING SYSTEM
IN-BOARD TV

LIMITLESS PERFORMANCE

Due to innovative AGM technology, the Running Bull is able to make a clear claim. It can be used for applications where others have long given up the ghost. In other words, when the demand is simply for unlimited quantities of power.

THE ADVANTAGES

- CONTINUOUS POWER OUTPUT
- MAXIMUM CAPACITY (70 AH)
- OPTIMUM STARTING POWER (760 A)
- VIBRATION RESISTANT
- CYCLE RESISTANCE
- TOTALLY SEALES
- LEAKPROOF
- THE LATEST AGM TECHNOLOGY
- ABSOLUTELY MAINTENANCE FREE
- LONG LIFE
- LOW SELF-DISCHARGE
- EXTENSIVE STORAGE LIFE

Banner

FOR THE TOUGHEST CONTINUOUS OPERATIONS

When the areas of application for the Running Bull are considered, one thing becomes clear immediately. This is a battery with power. The Running Bull can take on the most arduous of tasks, whether on construction sites, farms or in the daily grind of the transport industry.

APPLICATIONS

- ***ALL MODERN CARS***
- ***FARMING AND FORESTRY (tractors, harvesters, unimogs, ...)***
- ***CONSTRUCTION MACHINERY (diggers, vibrators, ...)***
- ***TAXIS, BUSES AND SPECIAL VEHICLES (piste preparation machines, emergency vehicles...)***
- ***SPECIAL APPLICATIONS WITH VERY HIGH POWER CONSUMPTION (sound systems, TVs, stationary heating, external lighting,...)***
- ***OFF-ROAD***

Banner

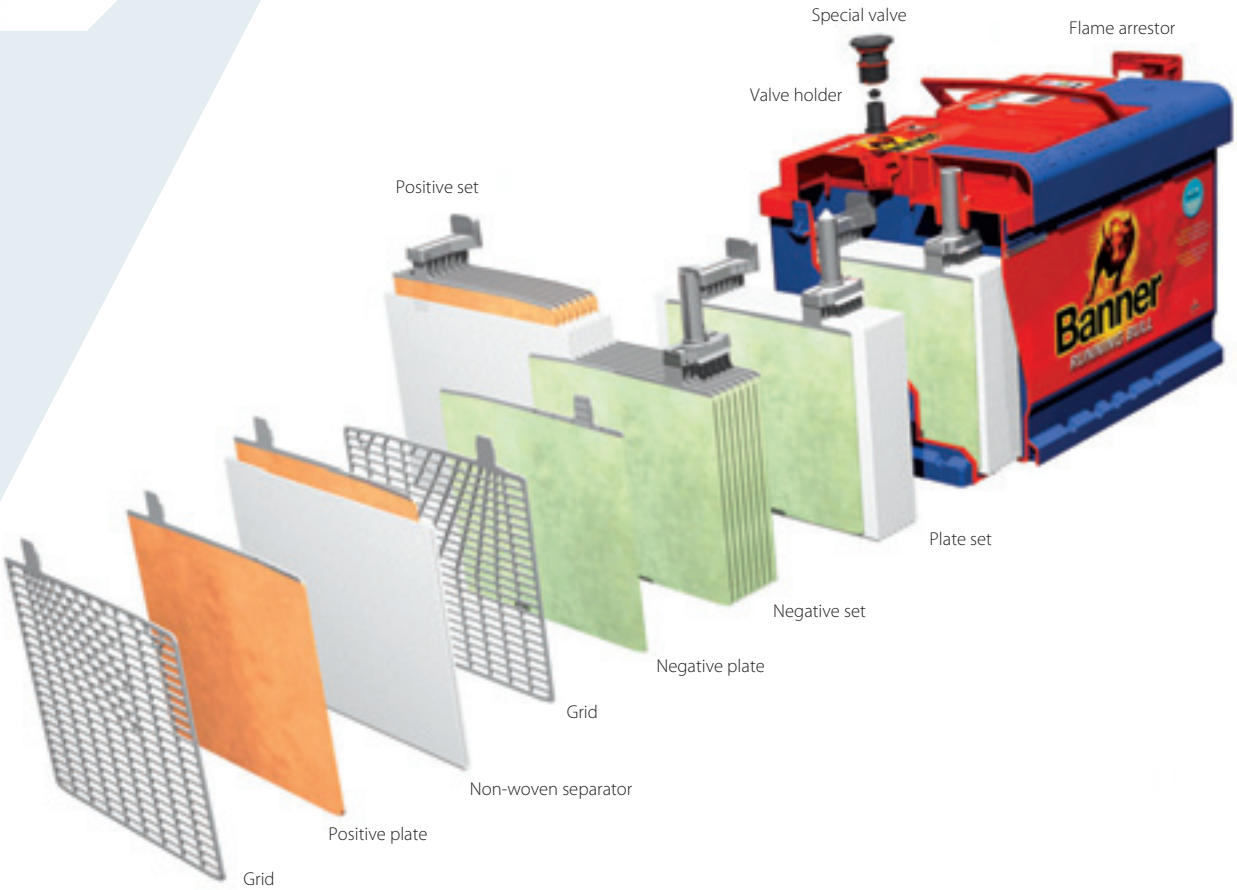
Special valve
Flame arrestor
Valve holder
Positive set
Plate set
Negative set
Negative plate
Grid
Non-woven separator
Positive plate
Grid
Banner

AGM – THE NEW BATTERY GENERATION

Stronger, more economic and absoloutely maintnenance-free. As an AGM battery, the Running Bull sets new benchmarks with regard to performance and reliability.

THE CHARACTERISTICS OF THE RUNNING BULL AS AN AGM BATTERY

- The electrolyte is bound into a non-woven web.
- The battery is airtight sealed by means of a valve.

THE ADVANTAGES:

No acid can escape and the Running Bull is entirely maintenance-free.

AGM TECHNOLOGY

MODEL PROGRAMME	57001	58001	59501 = 59201
Rated voltage	12 V	12 V	12 V
Capacity K20 (Ah)	70 Ah	80 Ah	92 Ah
Low-temperature test current EN (A)	720 A	800 A	850 A
Max. casing length	278 mm	315 mm	354 mm
Max. casing width	175 mm	175 mm	175 mm
Max. casing height = total height	190 mm	190 mm	190 mm
Base strip (mm)	B 13	B 13	B 13
Terminals	1	1	1
Switching	0/50/D	0/50/D	0/50/D

Banner

AGM TECHNOLOGY

The gas generated during charging (max. 14,4 V) is conducted through the pores in the glass fibre, non-woven web to the negative electrode, where it is converted back into water in a recombination process (hence the use of the term recombination). Consequently, water losses are impossible. In addition, the electrode plates are pressed so tightly together by the set packing that sludge formation is prevented. This provides very high levels of cyclical resistance and extended life.

For recharging the battery, we exclusively recommend voltage controlled chargers (14,4 V) with an IU charging characteristic. The Banner accessories programme offers a wide selection.

INTERNAL OXYGEN CYCLE

in a recombination battery

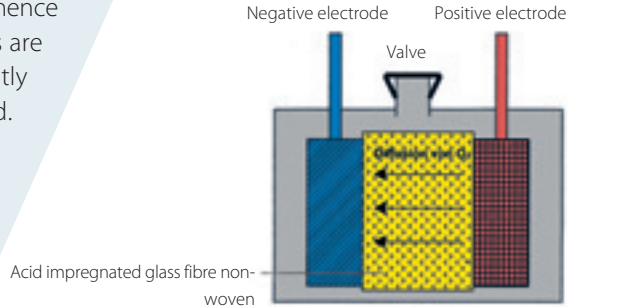

$$2Pb+O_2 \rightarrow 2PbO$$

$$2PbO+2H_2SO_4 \rightarrow 2PbSO_4+2H_2O$$

$$2PbSO_4+4e^-+4H^+ \rightarrow 2Pb+2H_2SO_4$$

$$2\,H_2O \rightarrow O_2+4H^+4e^-$$

Banner

PATENTS

AccuSafe - joint patent with Gore - patent right relinquished to Gore DE 197 03 444
AccuSafe - new registrant Banner A-943/2001

Banner GmbH, A-4021 Linz-Austria,
Banner Straße 1, Tel. +43/(0)732/38 88-0,
Telefax Verkauf +43/(0)732/38 88-599,
e-mail: office@bannerbatterien.com

Banner Batteries (GB) Ltd., Units 5-8 Canal View Business Park,
Wheelhouse Road, Rugeley, Staffordshire WS15 1UY,
Tel. +44/(0)1889/ 57 11 00, Telefax +44/(0)1889/ 57 73 42,
e-mail: office.bgb@bannerbatteries.com

17030000502/05-11

www.bannerbatteries.com

Banner Batterien

THE POWER COMPANY